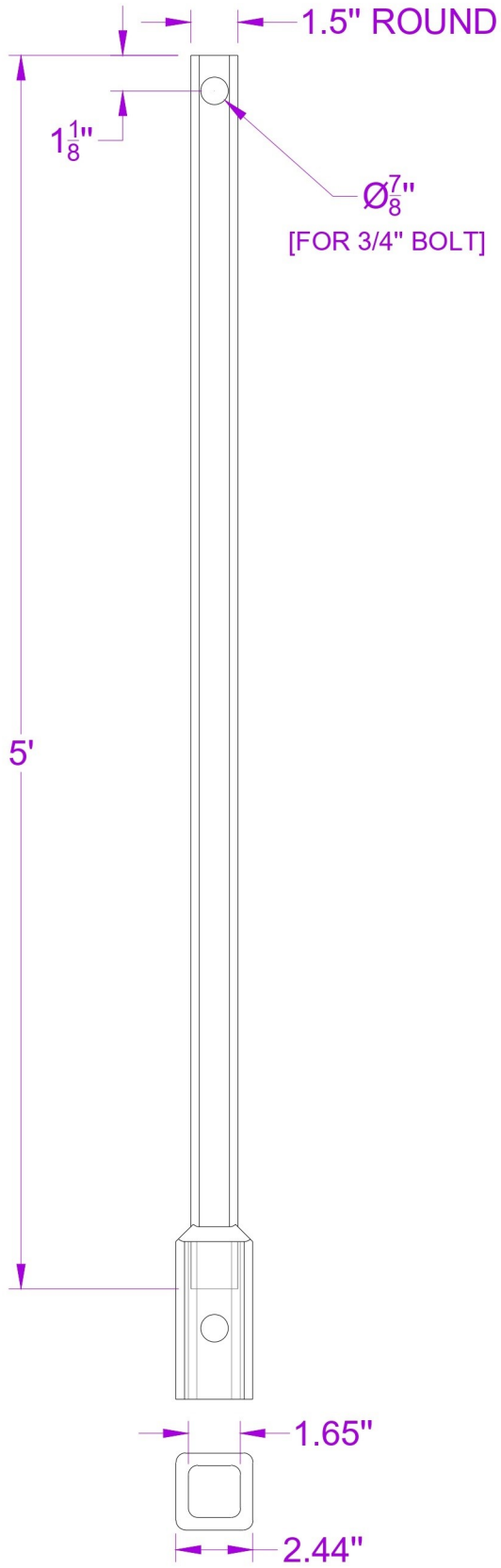

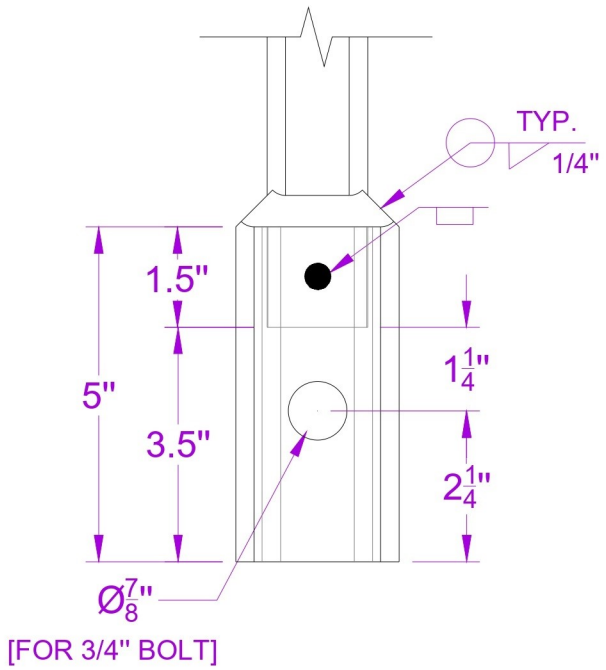

NOTES :

1. PILE SHAFT TO MEET OR EXCEED REQUIREMENTS OF ASTM A29-15/A576-90B, 90 KSI.
2. COUPLER AS PER GRADE ST-52; MINIMUM YIELD STRENGTH 355 MPA.
3. ALL WELDING TO BE PERFORMED BY SHOP CERTIFIED TO AWS D1:1 STRUCTURAL CODE - STEEL.
4. HOT DIP GALVANIZING PER ASTM A123.
5. 3/4" DIAMETER HEAVY HEX BOLT AS PER SAE J429 GR.8 AND NUT AS PER SAE J995.

REV.NO.	REVISIONS	DATE

SPEC.	SEE NOTE	TITLE	ALL DIMENSION ARE IN INCH UNLESS SPECIFIED	
MATERIAL	SEE NOTE	1.5" SQ EXTENSION - 5'	WT. IN.	PROJECTION
COATING	SEE NOTE			
		DRAWING NO. : S-2809	SCALE - NTS	SHT: 1 of 1

APP BY		
CHEKD BY		
DRAWN BY	S.S.	21.07.26
	NAME	DATE

HELIX

COMPANY NAME - HELIX
EMAIL: HELIXPIERS@GMAIL.COM
PHONE: (720) 326-3365